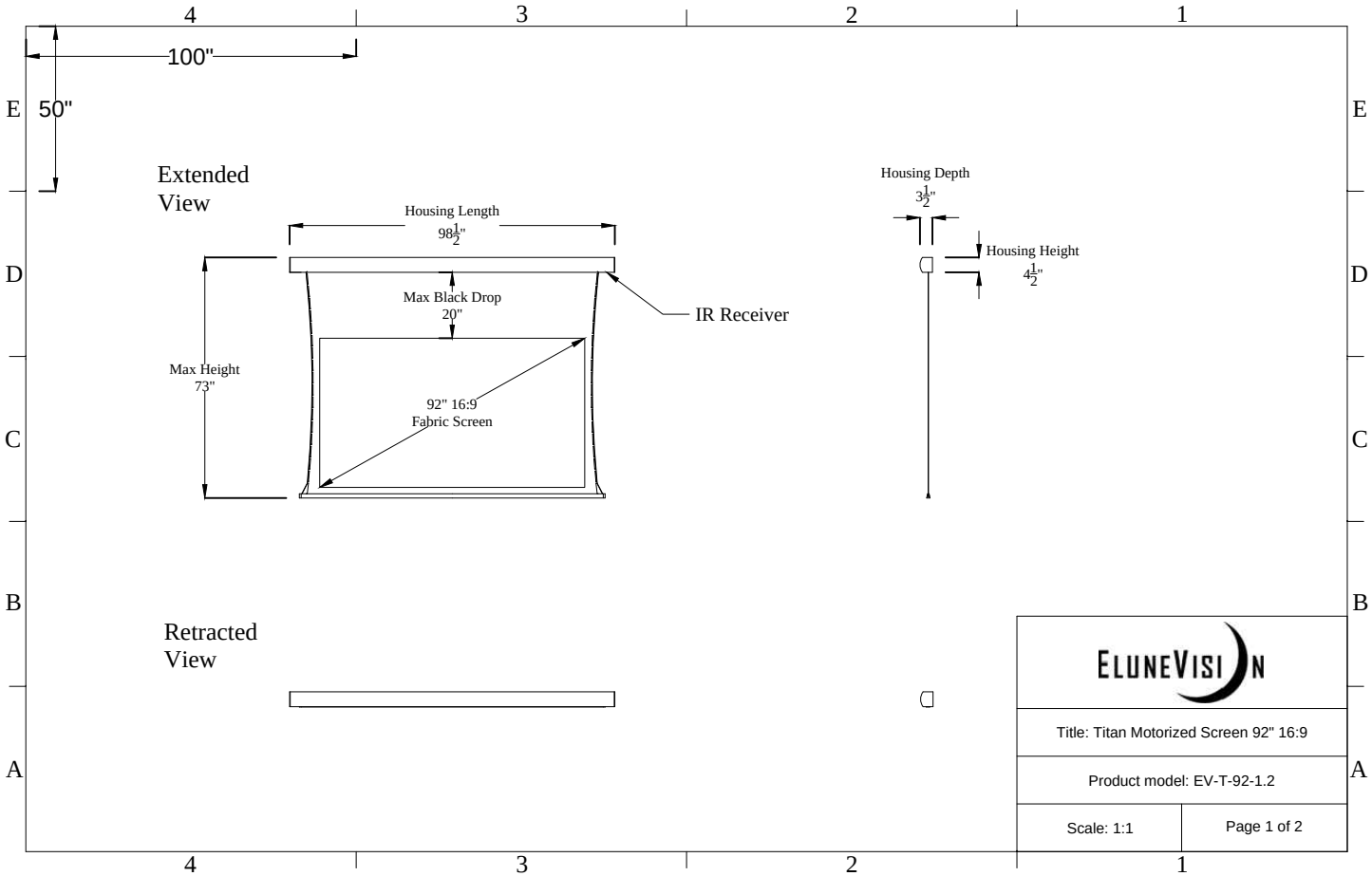

ELUNEVISION

Title: Titan Motorized Screen 92" 16:9

Product model: EV-T-92-1.2

Scale: 1:1

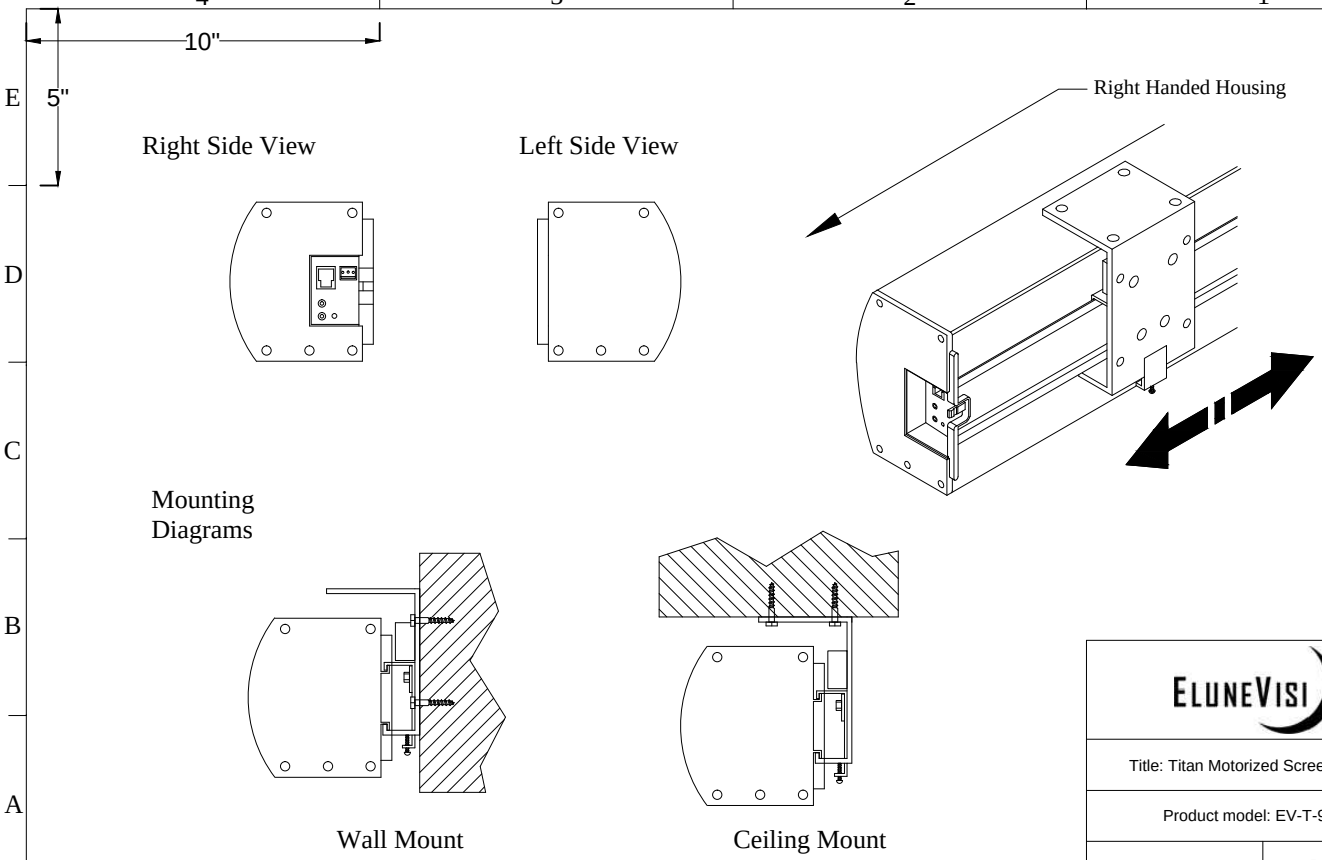

ELUNEVISION

Title: Titan Motorized Screen 92" 16:9

Product model: EV-T-92-1.2

Scale: 10:1