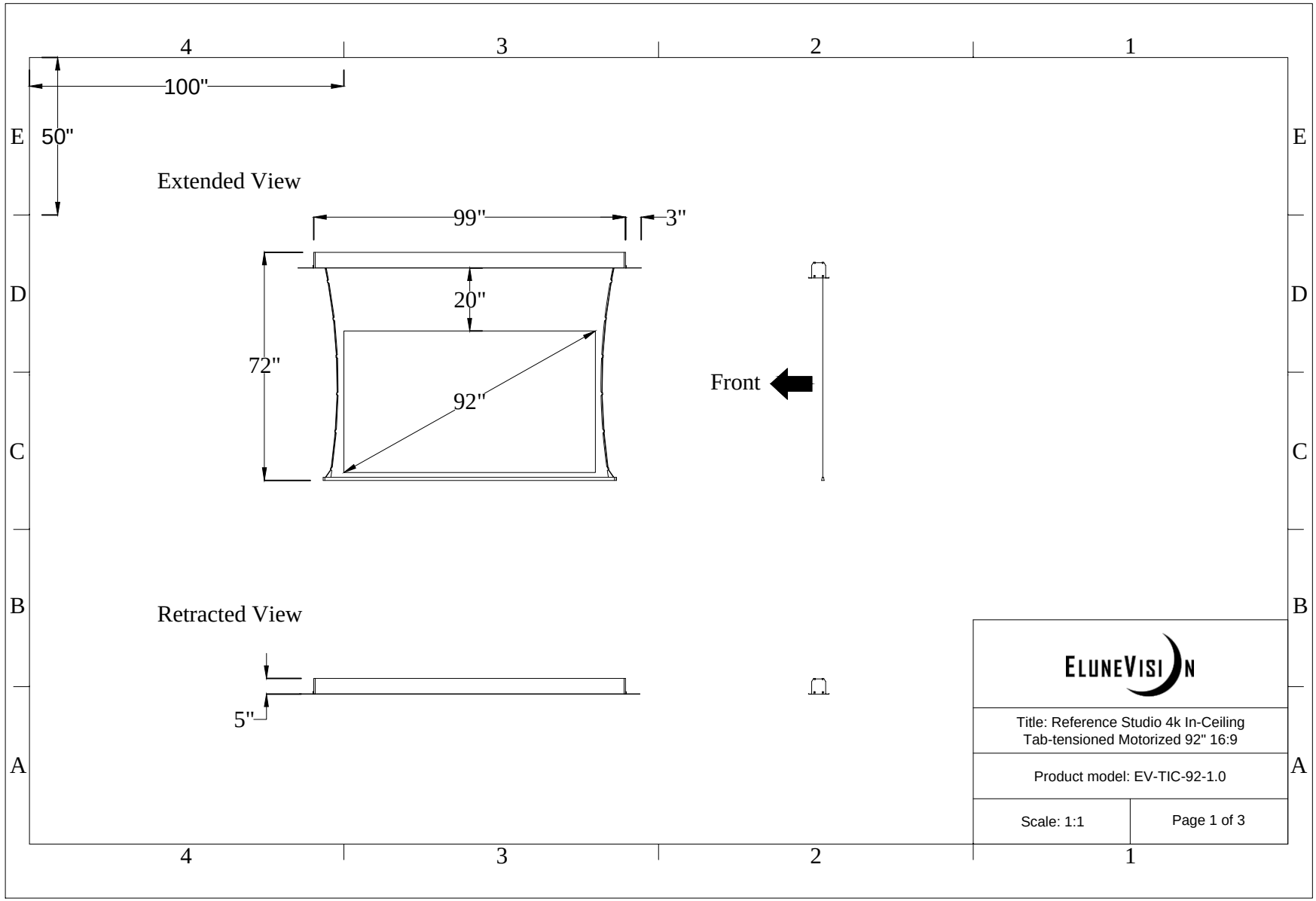

ELUNEVISION

Title: Reference Studio 4k In-Ceiling Tab-tensioned Motorized 92" 16:9

Product model: EV-TIC-92-1.0

Scale: 1:1

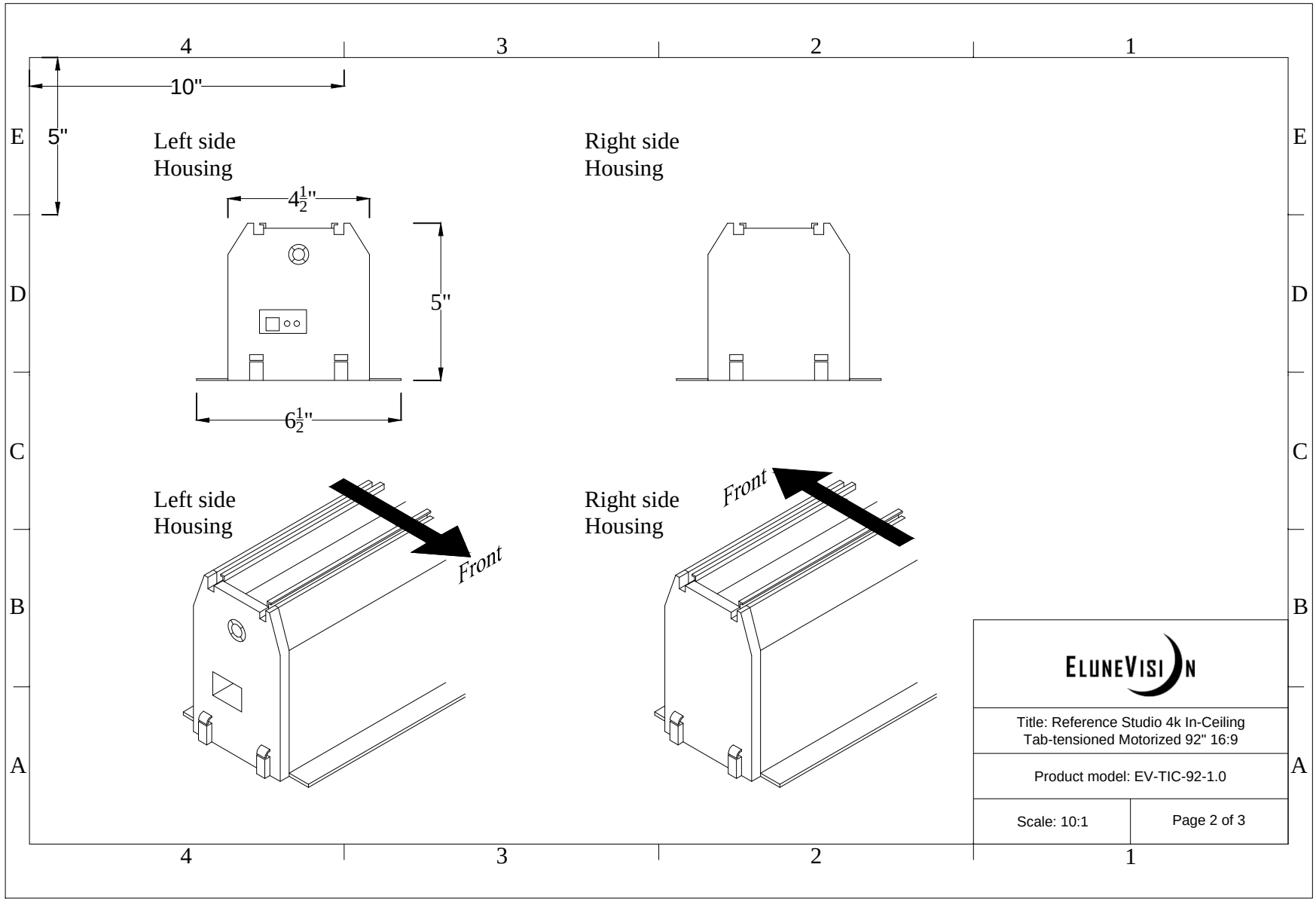

ELUNEVISION

Title: Reference Studio 4k In-Ceiling
Tab-tensioned Motorized 92" 16:9

Product model: EV-TIC-92-1.0

Scale: 10:1

Page 2 of 3

Mounting Diagrams

Ceiling Opening

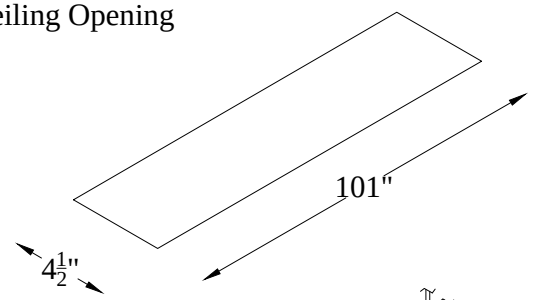

Ceiling Mount

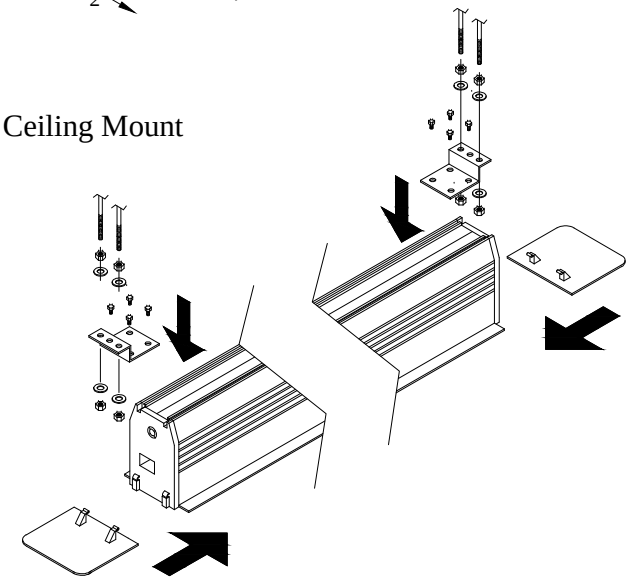

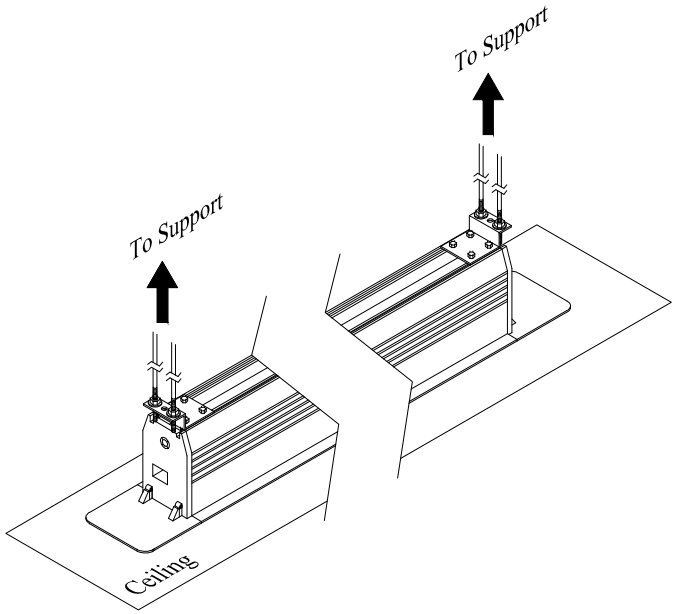

ELUNEVISION

Title: Reference Studio 4k In-Ceiling Tab-tensioned Motorized 92" 16:9

Product model: EV-TIC-92-1.0

Not to Scale